BATTERY LEVEL INDICATOR USING LM3914

1. Introduction

Battery-powered devices are widely used in modern electronic systems such as portable instruments, mobile devices, and backup power systems. Monitoring the battery charge level is important to ensure proper operation and avoid unexpected shutdown.

A **Battery Level Indicator** is a circuit that visually displays the remaining charge of a battery using **Light Emitting Diodes (LEDs)**. In this project, the **LM3914 IC** is used to control a series of LEDs that indicate the battery voltage level.

The LM3914 is a **linear LED driver IC** that can drive up to **10 LEDs**. It compares the input voltage with internally set reference voltages and lights the corresponding LEDs depending on the battery voltage.

This project demonstrates the practical use of **voltage dividers, resistor networks, and analog comparator circuits** in battery monitoring systems.

2. Objective

The objective of this project is:

- To design and implement a **Battery Level Indicator circuit**.
- To display the **remaining battery charge using LEDs**.
- To understand the working of the **LM3914 LED driver IC**.
- To learn the practical application of **voltage divider networks**.
- To observe how input voltage variations control the LED indicators.

3. Components Required

Component	Quantity
LM3914 IC	1
LEDs	10
Resistors	4
Potentiometer	1
Breadboard	1
Connecting Wires	As required
Switch	1
Battery / Power Supply	1

4. Circuit Diagram

The circuit consists of the **LM3914 IC connected to 10 LEDs**, resistors for reference voltage setting, and a potentiometer for adjusting the input range. The LEDs display the battery level based on the input voltage.

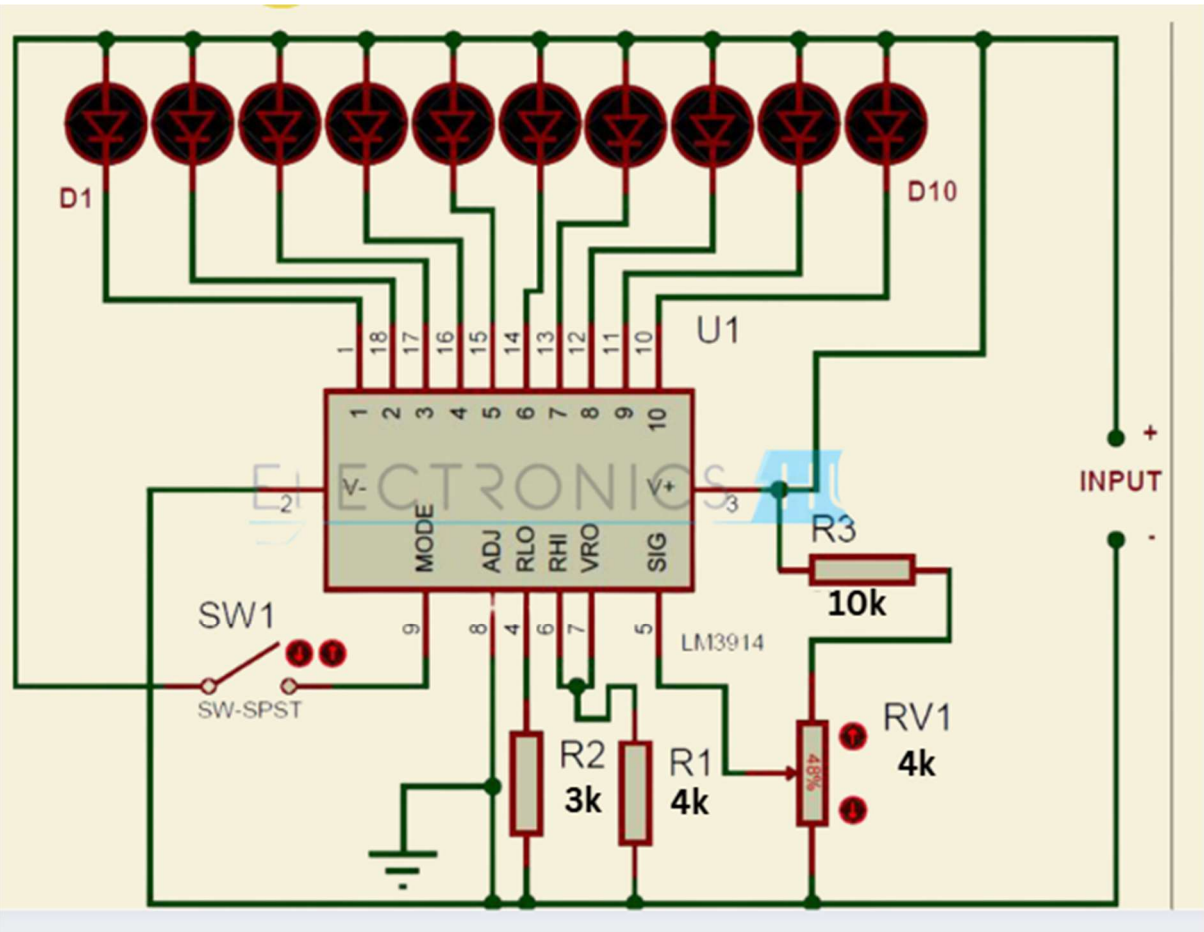

5. Working Principle

The working of this Battery Level Indicator is based on **voltage comparison using the LM3914 IC**.

The LM3914 internally contains **10 comparators**. Each comparator corresponds to one LED output.

When the battery voltage is applied to the **input signal pin**, the IC compares it with internally generated reference voltages.

Depending on the voltage level:

- A specific comparator activates
- The corresponding LED turns ON
- Higher voltage lights more LEDs

Thus the LEDs provide a **visual indication of the battery charge level**

6. Working Procedure

1. Connecting LEDs

The cathodes of the **10 LEDs** are connected to **pins 1–10 of the LM3914 IC**.
The anodes are connected to the **positive supply rail through current limiting resistors**.

2. Power Supply Connection

The power supply is provided to the IC as follows:

- **Pin 3 (V+)** → Connected to positive supply (12V)
- **Pin 2 (GND)** → Connected to ground

This powers the LM3914 IC.

3. Reference Voltage Setup

Two resistors are used to create a **reference voltage network**.

- **R1** is connected between **V+ (Pin 3) and REF OUT (Pin 7)**.
- **R2** is connected between **REF OUT (Pin 7) and Ground**.

A **potentiometer** can also be used to adjust the reference voltage and calibrate the LED levels.

4. Battery Connection

The battery voltage to be measured is connected as follows:

- **Battery positive terminal → Input signal pin**
- **Battery negative terminal → Ground**

The LM3914 compares this voltage with the reference voltages.

5. Mode Selection

The LM3914 supports **two display modes**:

Bar Mode

- All LEDs up to the voltage level remain ON.
- Pin 9 is left open or connected to V+.

Dot Mode

- Only one LED glows at a time.
- Pin 9 is connected to Ground.

6. Final Connection

The **REF ADJ pin (Pin 8)** is connected to **REF OUT (Pin 7)** through a resistor to control the LED current.

This ensures safe current flow through the LEDs.

9. Applications

- Battery charge monitoring systems
- UPS battery indicators
- Power bank indicators
- Electric vehicle battery monitoring
- Portable electronic devices

10. Advantages

- Simple circuit design
- Low cost
- Easy to implement
- Visual indication of battery level
- No microcontroller required

11. Limitations

- Limited to 10 LED levels
- Not suitable for very high voltage batteries without scaling
- Accuracy depends on resistor calibration

12. Conclusion

The **Battery Level Indicator using LM3914** was successfully designed and implemented. The circuit effectively displays the battery voltage level using a series of LEDs.

This project helped in understanding the practical implementation of **voltage divider networks, comparator circuits, and LED driver ICs**. The system can be used in various electronic devices to monitor battery status efficiently.